NOTES: UNLESS OTHERWISE SPECIFIED:

1. PREPARE AS INVENTORIED STOCK. REMOVE ALL BURRS AND BREAK SHARP EDGES.
2. 1/8 INCH METAL STAMP OR INK MARK PART NUMBER ON PART. BAG OR TAG SMALL PARTS OR ASSEMBLIES AS REQUIRED.
3. DOCUMENT AND PART NUMBER SYNTAX SHALL BE GOVERNED BY ED-00001A1.00 DOCUMENT.
4. BULK HARDWARE SYNTAX SHALL BE GOVERNED BY ED-90000H1.00 DOCUMENT.

REVISIONS			
REV	DESCRIPTION	DATE	APVD
A	INITIAL RELEASE	04/05/2016	RMH
B	RDSGN FOR HIGH INSUL ROOF	05/07/2016	RMH
C	C-Rev Line		
D	D-Rev Line		
E	E-Rev Line		

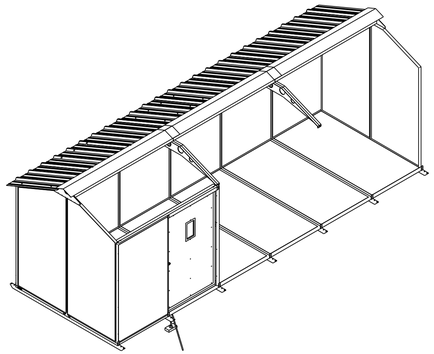

SCALE 1:48

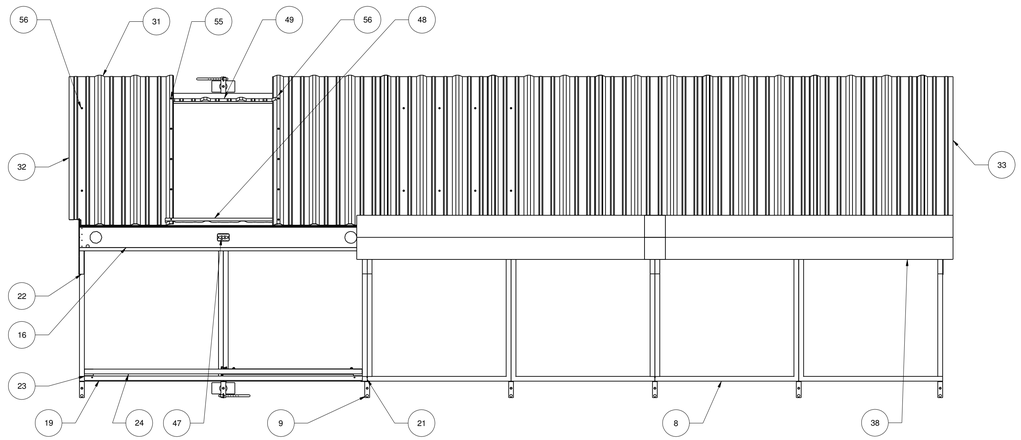

DASH -06 CONFIGURATION SHOWN, PLAN OR TOP VIEW
MULTIPLE CONFIGURATIONS ARE AVAILABLE

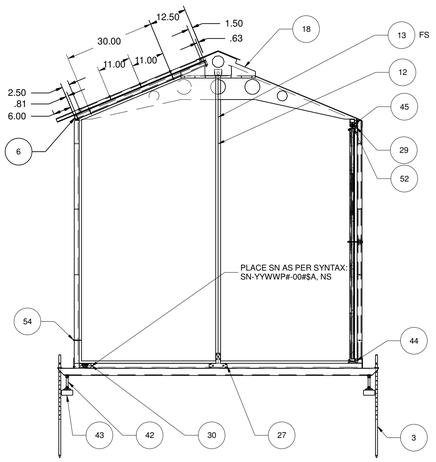

LEFT VIEW

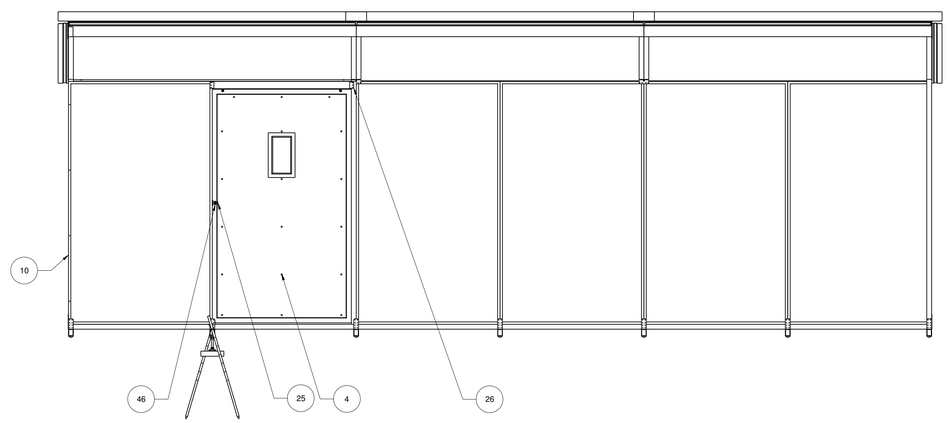

FRONT VIEW

ITEM NO	QTY-02	QTY-03	QTY-04	QTY-05	QTY-06	QTY-07	QTY-08	PART NO	PART NAME OR DESCRIPTION
58									
57									
56	12	24	36	48	60			BK-97920FX.14-32	SCREW SELFDRILL ROOF HH 12 X 2.00 MC 94058A311
55	65	110	155	190	225			BK-97920FX.14-16	SCREW SELFDRILL ROOF HH 12 X 1.00 MC 94058A296
54	16	16	16	16	16			BK-97920FX.14-40	SCREW SELFDRILL HH 12 X 2.50 MC 90822A591
53	100	120	140	160	180			BK-97900FX.14-12	SCREW SELFDRILL HH 12 X 3_4
52	4	4	4	4	4			BK-96900F6.24-20	BOLT HH 3_8 X 1 1_4 GRD 5 (DOOR RAIL)
51									
50									
49	6	10	12	14	18			CS-01300R1.22-01	R-ROOF INSIDE CLOSURE
48	6	10	12	14	18			CS-01300R1.21-01	R-ROOF OUTSIDE CLOSURE
47	1	2	2	3	3			CS-01300E1.58-01	ELE BOX 2.13 INCH EATON TP604
46	1	1	1	1	1			CS-01300D3.53-01	PIN QR .375 X 3 RING HANDLE MONROE LBH-SS7134
45	4	4	4	4	4			CS-01300D3.51-01	STRUT NUT .375-16 MC 3259T32
44	1	1	1	1	1			CS-01300D1.55-01	DOOR GUIDE-SINGLE JOHNSON 2037
43	6	8	10	12	14			CS-01300A1.52-01	PAVER COMMON 4 X 8 X 1.7
42	6	8	10	12	14			CS-01300A1.11-01	LEVELOR STEEL 6K RATING W NUT ESSENTRA TL-30
41									
40									
39		2		2				VC-01300R1.13-03	RIDGE ROOF (MIDDLE)
38	1		2	1	3			VC-01300R1.13-02	RIDGE ROOF
37					2			VC-01300A6.11-06	R-ROOFING
36				2				VC-01300A6.11-05	R-ROOFING
35			2					VC-01300A6.11-04	R-ROOFING
34		2						VC-01300A6.11-03	R-ROOFING
33	2							VC-01300A6.11-02	R-ROOFING
32	2	2	2	2	2			VC-01300A6.11-01	R-ROOFING (LEFT SIDE, VARIBLE CUT)
31	2	6	8	10	14			VC-01300A6.11-00	R-ROOFING (FULL SIZE)
30	1	1	1	1	1			SN-01300B1.10-01	SERIAL TAG
29	1	1	1	1	1			PA-01300D3.16-01	MOD TOP SEAL SEALEZE J140CLA10BL
28	1	2	2	2	2			PA-01300D3.15-01	MOD SIDE SEAL SEALEZE B210CLA10BL
27	2	2	2	2	2			PA-01300B1.53-02	T MOD SIMPSON 66T
26	1	1	1	1	1			HE-01300D3.14-01	HEADER DOOR
25	1	1	1	1	1			HE-01300D3.13-01	BRACKET DOOR LOCK
24	1	1	1	1	1			HE-01300D3.12-01	STRUT RAIL
23	2	2	2	2	2			HE-01300D3.11-01	BRACKET DOOR RAIL
22	4	4	4	4	4			HE-01300A5.29-01	WEDGE INSULATION
21	1	1	1	1	1			HE-01300A5.27-01	CORNER COLUMN STRUT
20		4		4				HE-01300A5.25-03	ROOF DRILL PLATE (MIDDLE)
19	2		4	2	6			HE-01300A5.25-02	ROOF DRILL PLATE
18	2	2	2	2	2			HE-01300A5.13-01	SIDE PICK PLATE
17		2		2				HE-01300A5.11-03	C ROOF SUPPORT (MIDDLE)
16	1		2	1	3			HE-01300A5.11-02	C ROOF SUPPORT (LONG)
15									
14									
13	2	2	2	2	2			AS-01300W3.10-02	ASSY END WALL (MIRROR)
12	2	2	2	2	4			AS-01300W3.10-01	ASSY END WALL
11	3	4	4	4	4			AS-01300W2.10-02	ASSY SIDE WALL
10		1	3	5	7			AS-01300W2.10-01	ASSY SIDE WALL
9	3	4	5	6	7			AS-01300W1.30-01	ASSY FLOOR SUPPORT WELDMT
8	2	3	4	5	6			AS-01300W1.10-01	ASSY FLOOR PANEL
7		4		4				AS-01300R2.30-03	ASSY ROOF SIP (SHORT)
6	2		4	2	6			AS-01300R2.30-02	ASSY ROOF SIP
5		1	1	2	2			AS-01300R2.10-01	TRUSS STEEL (WELDMENT)
4	1	1	1	1	1			AS-01300D1.10-01	ASSY DOOR PANEL
3	6	8	10	12	14			AS-01300A2.20-01	ASSY ANCHOR STAKE
2									
1	2,130	2,860	3,590	4,320	5,050				APPROXIMATE WEIGHT [LBS]

Ralph M Hilton

Digitally signed by Ralph M Hilton
DN: cn=Ralph M Hilton, o=Hilton Engineering Inc, ou=Engineering Group, email=ralph.hilton@hiltoneng.com, c=US
Date: 2016.11.21 13:38:19 -07'00'

NOTE:
THIS DOCUMENT CONTAINS PROPRIETARY DESIGN INFORMATION. DO NOT MANUFACTURE, COPY, OR EXTRACT DATA UNLESS WRITTEN AUTHORIZATION OF HILTON ENGINEERING INC IS OBTAINED.

DASH NO.	FINAL	NEXT	NEXT ASSY	USED ON JOB
	QTY REQD		APPLICATION / NOT ALL INCLUSIVE	
-06			TOP	FREEDOM VI
-05			TOP	LIBERTY V
-04			TOP	MINUTEMAN IV
-03			TOP	PATRIOT III
-02	-	-	TOP	REVOLUTION II
-01	-	-	-	-

UNLESS OTHERWISE SPECIFIED
DIMENSIONS ARE IN INCHES
DRAWING BASED ON ANSI Y14.5M-1982
SURFACE ROUGHNESS 125
FRACTIONS ± 1/16 DECIMALS .XX ± .03 .XXX ± .010 ANGLES ± 1°

DRAWN RALPH HILTON
CHECKED
SIMILAR TO:

MATERIAL: SEE BOM
FINISH: PAINT, PRIMER WHT

HILTON ENGINEERING
www.hiltoneng.com
NAME ASSY TOP HOUSE
SIZE D DWG NO AT-01300B1.00 REV B
SCALE 1 : 24 WEIGHT SEE BOM SHEET 1 OF 1